Cambridge International AS & A Level

Cambridge International Examinations
Cambridge International Advanced Subsidiary and Advanced Level

CANDIDATE NAME									
CENTRE NUMBER						CANDIDATE NUMBER			

2146315302

PHYSICS **9702/23**

Paper 2 AS Structured Questions **May/June 2015**

1 hour

Candidates answer on the Question Paper.

No Additional Materials are required.

READ THESE INSTRUCTIONS FIRST

Write your Centre number, candidate number and name on all the work you hand in.
Write in dark blue or black pen.
You may use an HB pencil for any diagrams or graphs.
Do not use staples, paper clips, glue or correction fluid.
DO **NOT** WRITE IN ANY BARCODES.

Answer **all** questions.

Electronic calculators may be used.
You may lose marks if you do not show your working or if you do not use appropriate units.

At the end of the examination, fasten all your work securely together.
The number of marks is given in brackets [ ] at the end of each question or part question.

This document consists of **14** printed pages and **2** blank pages.

© UCLES 2015

CAMBRIDGE International Examinations

Data

speed of light in free space, $c = 3.00 \times 10^{8}\ \text{m s}^{-1}$

permeability of free space, $\mu_0 = 4\pi \times 10^{-7}\ \text{H m}^{-1}$

permittivity of free space, $\varepsilon_0 = 8.85 \times 10^{-12}\ \text{F m}^{-1}$

$$\left(\frac{1}{4\pi\varepsilon_0} = 8.99 \times 10^{9}\ \text{m F}^{-1}\right)$$

elementary charge, $e = 1.60 \times 10^{-19}\ \text{C}$

the Planck constant, $h = 6.63 \times 10^{-34}\ \text{J s}$

unified atomic mass constant, $u = 1.66 \times 10^{-27}\ \text{kg}$

rest mass of electron, $m_e = 9.11 \times 10^{-31}\ \text{kg}$

rest mass of proton, $m_p = 1.67 \times 10^{-27}\ \text{kg}$

molar gas constant, $R = 8.31\ \text{J K}^{-1}\ \text{mol}^{-1}$

the Avogadro constant, $N_A = 6.02 \times 10^{23}\ \text{mol}^{-1}$

the Boltzmann constant, $k = 1.38 \times 10^{-23}\ \text{J K}^{-1}$

gravitational constant, $G = 6.67 \times 10^{-11}\ \text{N m}^2\ \text{kg}^{-2}$

acceleration of free fall, $g = 9.81\ \text{m s}^{-2}$

© UCLES 2015

Formulae

uniformly accelerated motion, $s = ut + \frac{1}{2}at^2$
$v^2 = u^2 + 2as$

work done on/by a gas, $W = p\Delta V$

gravitational potential, $\phi = -\frac{Gm}{r}$

hydrostatic pressure, $p = \rho gh$

pressure of an ideal gas, $p = \frac{1}{3}\frac{Nm}{V}\langle c^2 \rangle$

simple harmonic motion, $a = -\omega^2 x$

velocity of particle in s.h.m., $v = v_0 \cos \omega t$
$v = \pm \omega\sqrt{(x_0^2 - x^2)}$

electric potential, $V = \frac{Q}{4\pi\varepsilon_0 r}$

capacitors in series, $1/C = 1/C_1 + 1/C_2 + \ldots$

capacitors in parallel, $C = C_1 + C_2 + \ldots$

energy of charged capacitor, $W = \frac{1}{2}QV$

resistors in series, $R = R_1 + R_2 + \ldots$

resistors in parallel, $1/R = 1/R_1 + 1/R_2 + \ldots$

alternating current/voltage, $x = x_0 \sin \omega t$

radioactive decay, $x = x_0 \exp(-\lambda t)$

decay constant, $\lambda = \frac{0.693}{t_{\frac{1}{2}}}$

© UCLES 2015

[Turn over

Answer **all** the questions in the spaces provided.

1 **(a)** The distance between the Sun and the Earth is 1.5×10^{11} m. State this distance in Gm.

distance = ... Gm [1]

(b) The distance from the centre of the Earth to a satellite above the equator is 42.3 Mm. The radius of the Earth is 6380 km.
A microwave signal is sent from a point on the Earth directly below the satellite.

Calculate the time taken for the microwave signal to travel to the satellite and back.

time = ... s [2]

(c) The speed v of a sound wave through a gas of density ρ and pressure P is given by

$$v = \sqrt{\frac{CP}{\rho}}$$

where C is a constant.

Show that C has no unit.

[3]

(d) Underline all the scalar quantities in the list below.

acceleration energy momentum power weight [1]

(e) A boat travels across a river in which the water is moving at a speed of $1.8\,m\,s^{-1}$. The velocity vectors for the boat and the river water are shown to scale in Fig. 1.1.

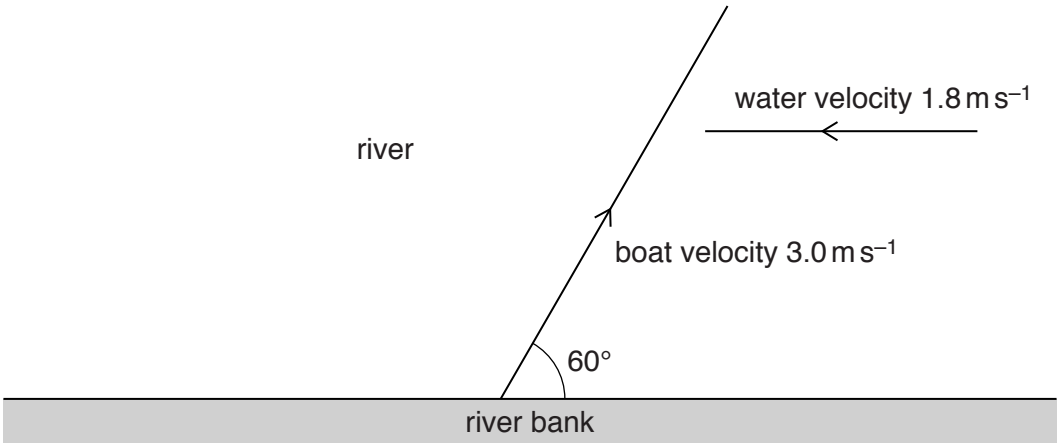

Fig. 1.1 (shown to scale)

In still water the speed of the boat is $3.0\,m\,s^{-1}$. The boat is directed at an angle of 60° to the river bank.

(i) On Fig. 1.1, draw a vector triangle or a scale diagram to show the resultant velocity of the boat. [2]

(ii) Determine the magnitude of the resultant velocity of the boat.

resultant velocity = ... $m\,s^{-1}$ [2]

2 The variation with time t of the velocity v of a ball is shown in Fig. 2.1.

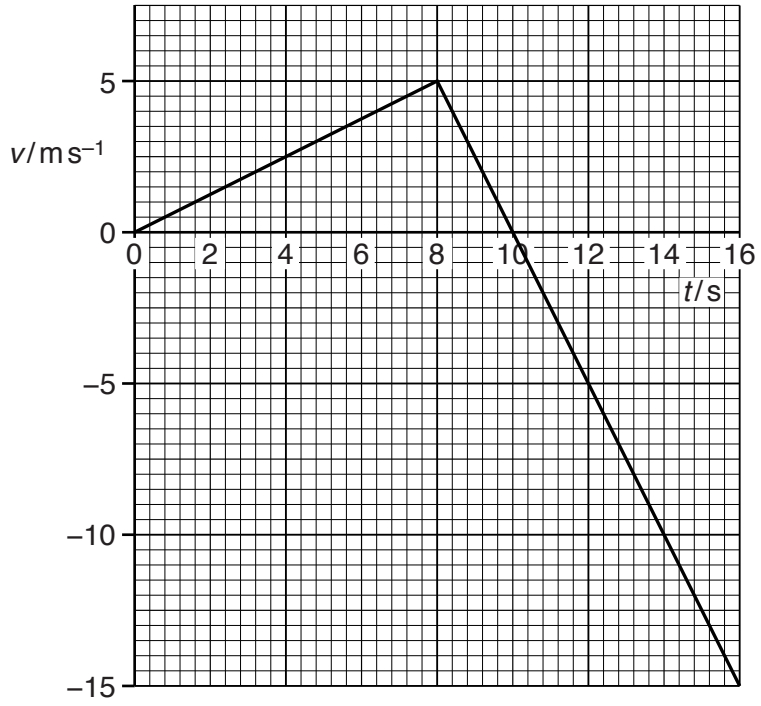

Fig. 2.1

The ball moves in a straight line from a point P at $t = 0$. The mass of the ball is 400 g.

(a) Use Fig. 2.1 to describe, without calculation, the velocity of the ball from $t = 0$ to $t = 16$ s.

.....

.....

.....

.....

.....[2]

© UCLES 2015

(b) Use Fig. 2.1 to calculate, for the ball,

(i) the displacement from P at $t = 10\,s$,

displacement = ... m [2]

(ii) the acceleration at $t = 10\,s$,

acceleration = ... $m\,s^{-2}$ [2]

(iii) the maximum kinetic energy.

kinetic energy = ... J [2]

(c) Use your answers in **(b)(i)** and **(b)(ii)** to determine the time from $t = 0$ for the ball to return to P.

time = ... s [2]

3 **(a)** Define *power*.

.....

.....[1]

(b) Fig. 3.1 shows a car travelling at a speed of $22\,m\,s^{-1}$ on a horizontal road.

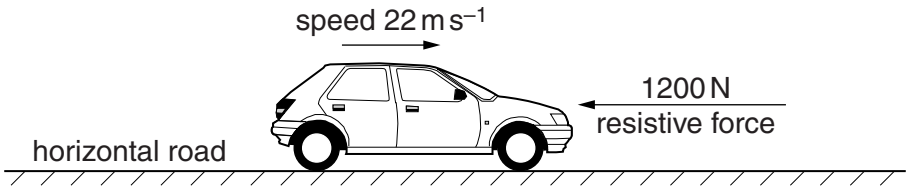

Fig. 3.1

The car has a mass of 1500 kg. A resistive force of 1200 N acts on the car.

Calculate

(i) the force F required from the car to produce an acceleration of $0.82\,m\,s^{-2}$,

F = ... N [3]

(ii) the power required to produce this acceleration.

power = ... W [2]

(c) The resistive force on the car is proportional to v^2, where v is the speed of the car.
Suggest why the car has a maximum speed.

.....

.....[1]

© UCLES 2015

4 Fig. 4.1 shows the values obtained in an experiment to determine the Young modulus *E* of a metal in the form of a wire.

quantity	value	instrument
diameter *d*	0.48 mm	
length *l*	1.768 m	
load *F*	5.0 N to 30.0 N in 5.0 N steps	
extension *e*	0.25 mm to 1.50 mm	

Fig. 4.1

(a) (i) Complete Fig. 4.1 with the name of an instrument that could be used to measure each of the quantities. [3]

(ii) Explain why a series of values of *F*, each with corresponding extension *e*, are measured.

.....

.....[1]

(b) Explain how a series of readings of the quantities given in Fig. 4.1 is used to determine the Young modulus of the metal. A numerical answer for *E* is not required.

.....

.....

.....

.....[2]

© UCLES 2015

5 A uniform resistance wire AB has length 50 cm and diameter 0.36 mm. The resistivity of the metal of the wire is $5.1 \times 10^{-7}\,\Omega\,\text{m}$.

(a) Show that the resistance of the wire AB is 2.5 Ω.

[2]

(b) The wire AB is connected in series with a power supply E and a resistor R as shown in Fig. 5.1.

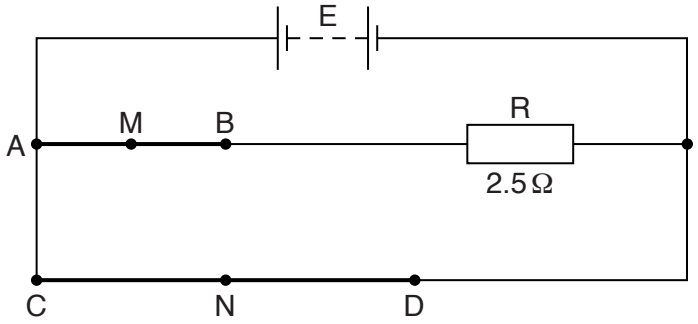

Fig. 5.1

The electromotive force (e.m.f.) of E is 6.0 V and its internal resistance is negligible. The resistance of R is 2.5 Ω. A second uniform wire CD is connected across the terminals of E. The wire CD has length 100 cm, diameter 0.18 mm and is made of the same metal as wire AB.

Calculate

(i) the current supplied by E,

current = ... A [4]

(ii) the power transformed in wire AB,

power = ... W [2]

(iii) the potential difference (p.d.) between the midpoint M of wire AB and the midpoint N of wire CD.

p.d. = ... V [2]

© UCLES 2015

[Turn over

6 **(a)** Two overlapping waves of the same type travel in the same direction. The variation with distance x of the displacement y of each wave is shown in Fig. 6.1.

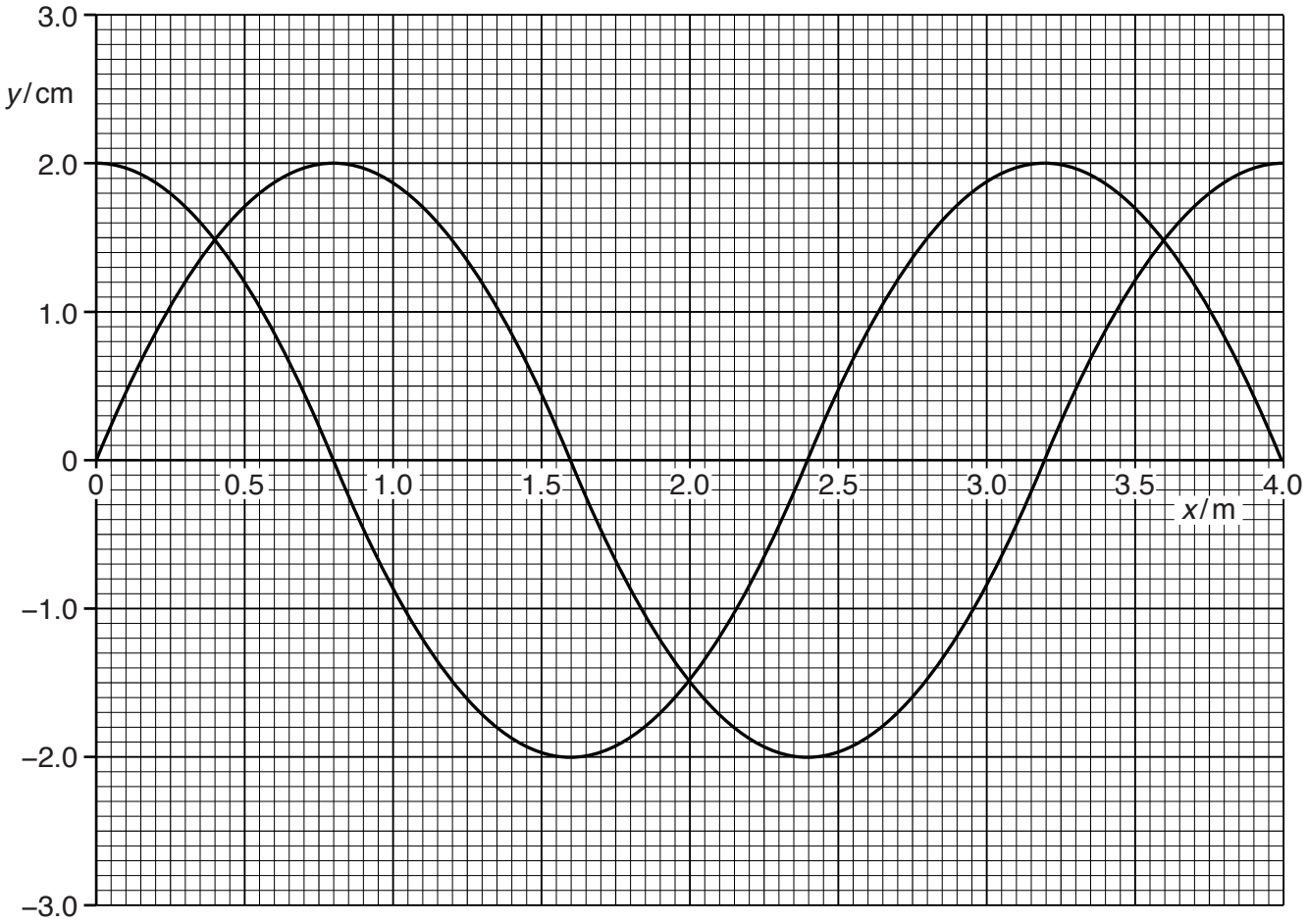

Fig. 6.1

The speed of the waves is $240\,m\,s^{-1}$. The waves are coherent and produce an interference pattern.

(i) Explain the meaning of *coherence* and *interference*.

coherence: .....

.....

interference: .....

.....

[2]

(ii) Use Fig. 6.1 to determine the frequency of the waves.

frequency = ... Hz [2]

© UCLES 2015

(iii) State the phase difference between the waves.

phase difference = ... ° [1]

(iv) Use the principle of superposition to sketch, on Fig. 6.1, the resultant wave. [2]

(b) An interference pattern is produced with the arrangement shown in Fig. 6.2.

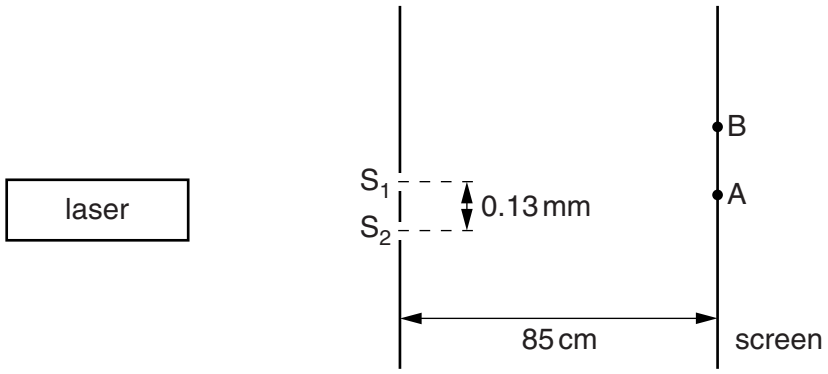

Fig. 6.2 (not to scale)

Laser light of wavelength λ of 546 nm is incident on the slits S_1 and S_2. The slits are a distance 0.13 mm apart. The distance between the slits and the screen is 85 cm.

Two points on the screen are labelled A and B. The path difference between S_1A and S_2A is zero. The path difference between S_1B and S_2B is 2.5λ. Maxima and minima of intensity of light are produced on the screen.

(i) Calculate the distance AB.

distance = ... m [3]

(ii) The laser is replaced by a laser emitting blue light. State and explain the change in the distance between the maxima observed on the screen.

.....

.....

.....[1]

7 The equation represents the spontaneous radioactive decay of a nucleus of bismuth-212.

$$^{212}_{83}\text{Bi} \longrightarrow \text{X} + ^{208}_{81}\text{T}\ell + 6.2\,\text{MeV}$$

(a) (i) Explain the meaning of *spontaneous* radioactive decay.

.....

.....[1]

(ii) State the constituent particles of X.

.....[1]

(b) (i) Use the conservation of mass-energy to explain the release of 6.2 MeV of energy in this reaction.

.....

.....

.....[2]

(ii) Calculate the energy, in joules, released in this reaction.

energy = ... J [1]

© UCLES 2015

BLANK PAGE

© UCLES 2015

BLANK PAGE

Permission to reproduce items where third-party owned material protected by copyright is included has been sought and cleared where possible. Every reasonable effort has been made by the publisher (UCLES) to trace copyright holders, but if any items requiring clearance have unwittingly been included, the publisher will be pleased to make amends at the earliest possible opportunity.

To avoid the issue of disclosure of answer-related information to candidates, all copyright acknowledgements are reproduced online in the Cambridge International Examinations Copyright Acknowledgements Booklet. This is produced for each series of examinations and is freely available to download at www.cie.org.uk after the live examination series.

Cambridge International Examinations is part of the Cambridge Assessment Group. Cambridge Assessment is the brand name of University of Cambridge Local Examinations Syndicate (UCLES), which is itself a department of the University of Cambridge.